amp
Process Solutions Group
A Kason and Marion Partnership

kason

MARION
PROCESS SOLUTIONS

# OPTIONS FOR MECHANICAL DEWATERING AND DRYING OF SPENT DISTILLERS GRAINS

*2021 DGTC Symposium*
*October 25, 2021*

# MECHANICAL DEWATERING & DRYING OF SPENT DISTILLERS GRAINS – Jim Ling

A process equipment specialist with over 30 years of experience in separation technology, Mechanical Engineer Jim Ling has developed equipment solutions and specifications for businesses from the smallest to the largest in wide ranging industries including food, pharma, beverage, chemical, plastic, metal, waste, hemp and cannabis – among others. As the Director of Business Development for Kason Corporation, Jim has worked to collaboratively develop effective and affordable dewatering processes that translate well to distillers and others screening for pre and post distillation products to monetize waste and to optimize production yields.

# MECHANICAL DEWATERING & DRYING OF SPENT DISTILLERS GRAINS – Abstract

Overview of screening grains and dewatering spent grains outlining choices to match production scale and dryness expectations within budgetary limits. Comparisons of screening techniques and the evolution of the traditional flour sifter, dry bulk solids processor, as an effective solution in liquid solids separation especially within distilleries. Includes a look at further processing of spent grains with small footprint dryers, compact and robust in a less traditional geometry. Considerations for green alternatives reuse spent grains and to add value to a common waste stream.

# MECHANICAL DEWATERING & DRYING OF SPENT DISTILLERS GRAINS

Kason

amp Process Solutions Group
A Kason and Marion Partnership

MARION PROCESS SOLUTIONS

# MECHANICAL DEWATERING - Static Screening


**Sidehill / Static / Cross Flow / Sta-Sieve / Hydroscreen**

**Features :**

- no moving parts
- outstanding corrosion and abrasion resistance s
- free-standing design I, small footprint
- manually adjustable decks
- zero energy consumption

# MECHANICAL DEWATERING OF SPENT DISTILLERS GRAINS – primitive screens

# MECHANICAL DEWATERING OF SPENT DISTILLERS GRAINS – primitive screens


# MECHANICAL DEWATERING – vibratory screening


**Vibrator Screeners**

Single- and multi-deck screeners
separation from 5cm to 25 microns,

- Low to high-capacity,
- Batch or continuous
- Classifying / Sizing
- Sifting
- Scalping
- Liquid/Solid Separating
- De-Dusting
- De-Lumping
- De-watering

# MECHANICAL DEWATERING OF SPENT DISTILLERS GRAINS – vibratory separating

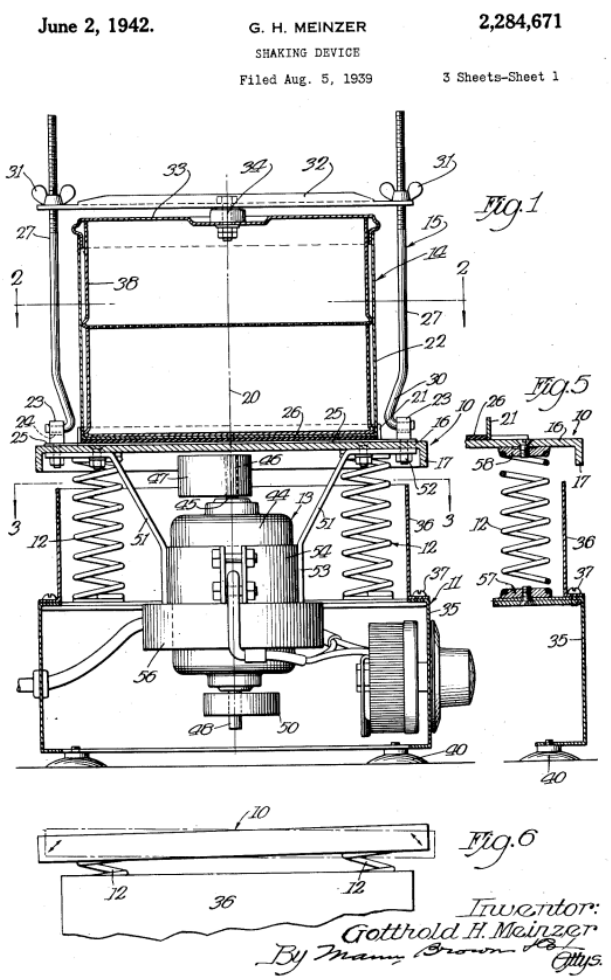


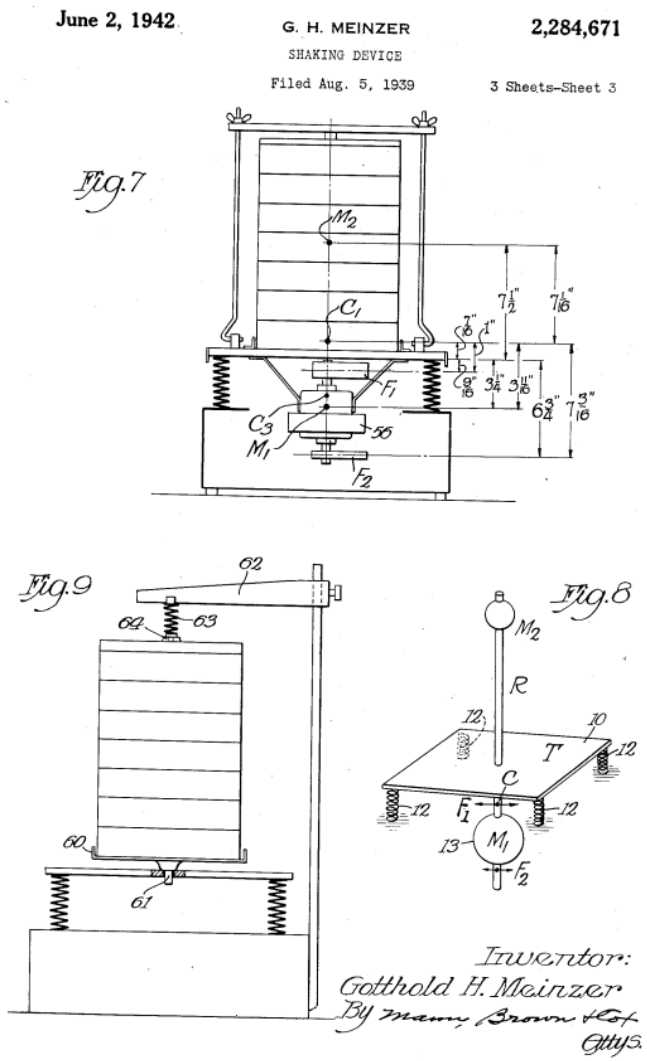


Kason

amp Process Solutions Group
A Kason and Marion Partnership

MARION PROCESS SOLUTIONS

# MECHANICAL DEWATERING OF SPENT DISTILLERS GRAINS – vibratory separating

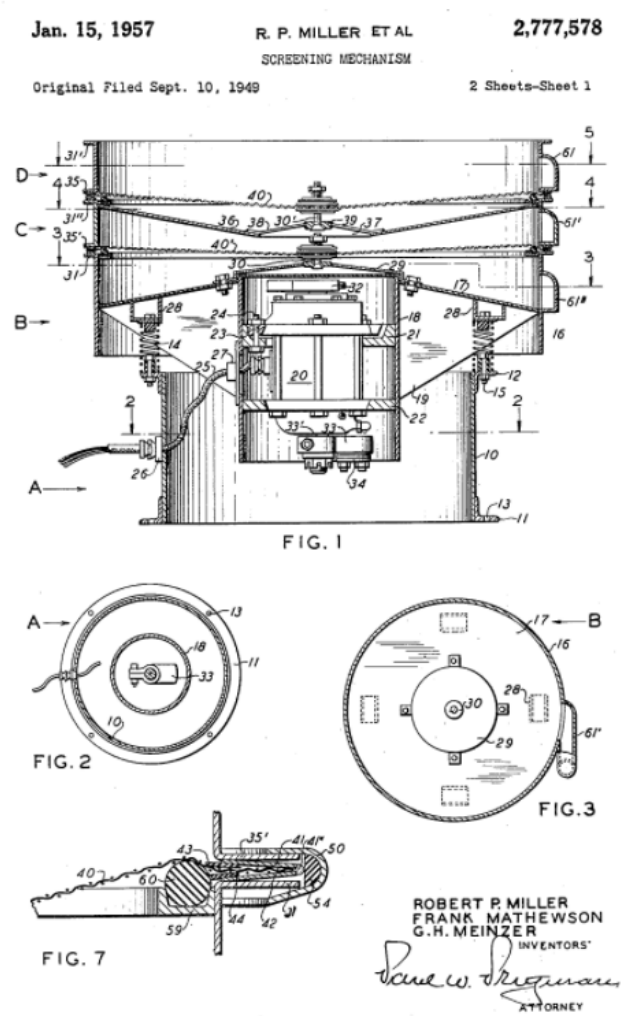


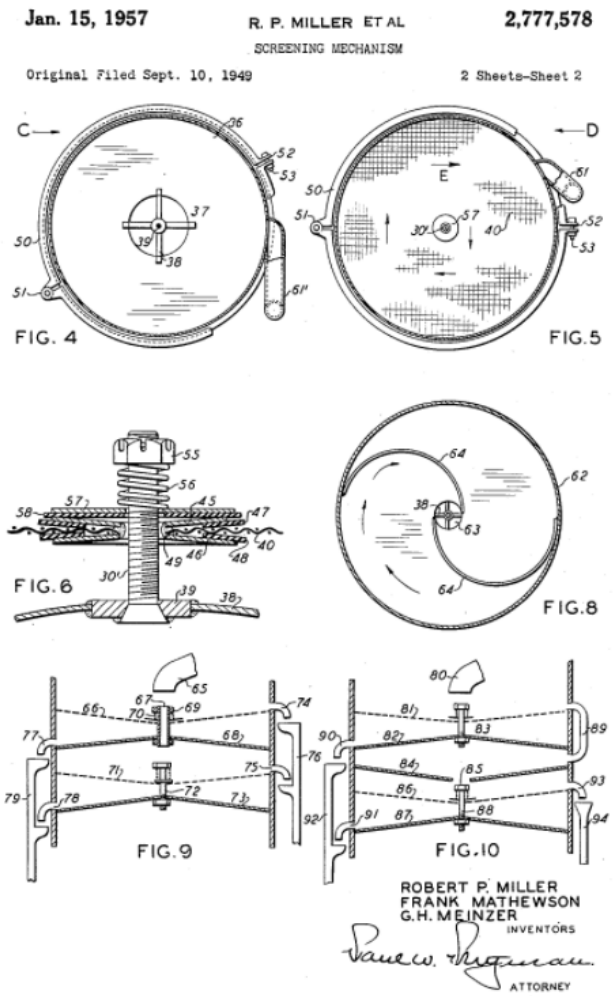


Kason

amp Process Solutions Group
A Kason and Marion Partnership

MARION PROCESS SOLUTIONS

# MECHANICAL DEWATERING OF SPENT DISTILLERS GRAINS – vibratory separating


# MECHANICAL DEWATERING OF SPENT DISTILLERS GRAINS – Centri-Sifter

# MECHANICAL DEWATERING – Centrifugal Dewatering

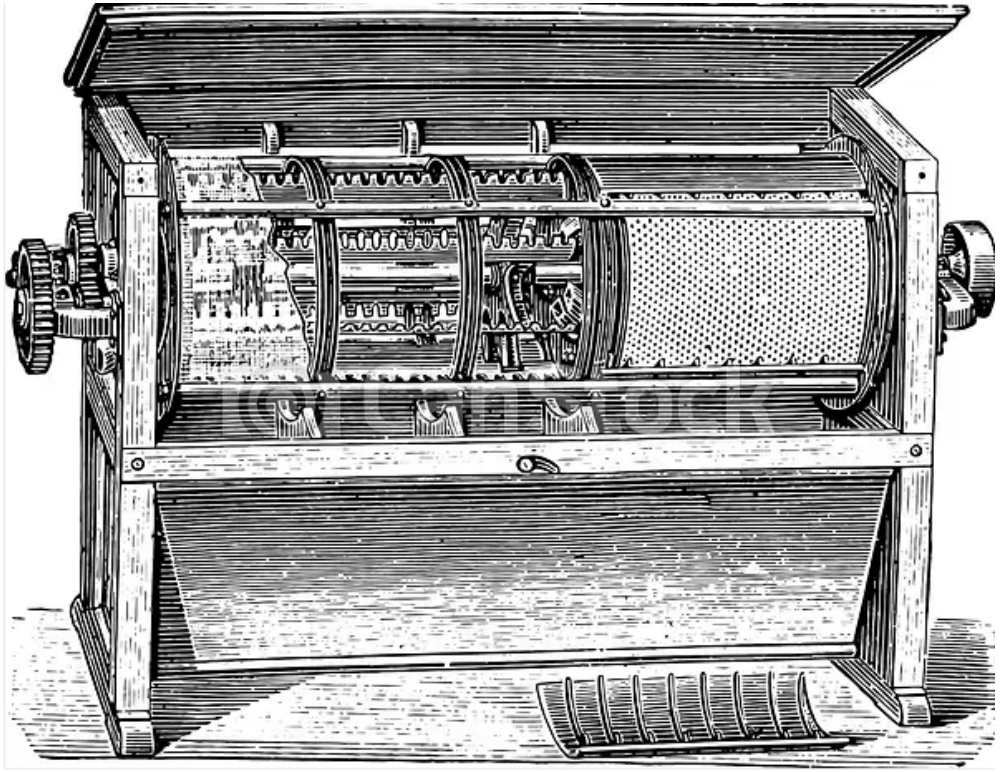

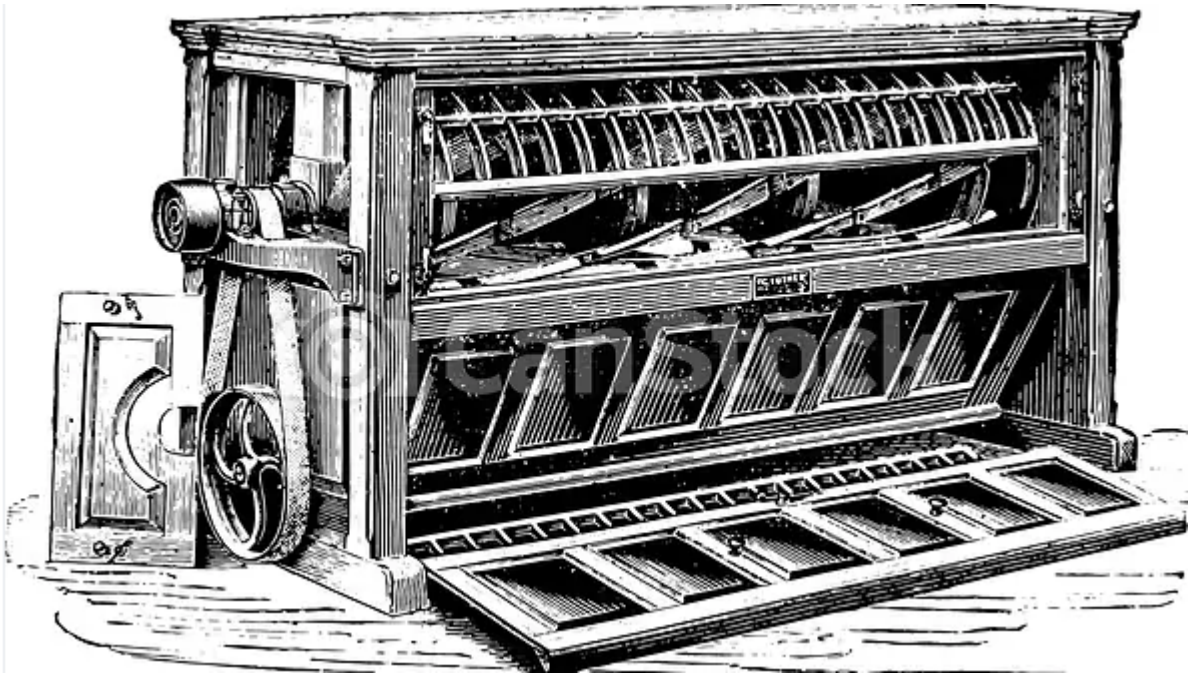

# MECHANICAL DEWATERING – Centrifugal Dewatering

# MECHANICAL DEWATERING – Centrifugal Dewatering


**Centri-Sifter**

from 5cm to 25 microns,

- Low to high-capacity
- Continuous processing
- Sifting
- Scalping
- ***Liquid/Solid Separating***
- De-Dusting
- De-Lumping
- ***De-watering (20-150M)***
- Liquid tight (or dust free)
- Quiet & vibration free
- Easy clean out
- Single or twin models

# MECHANICAL DEWATERING – Centrifugal Dewatering


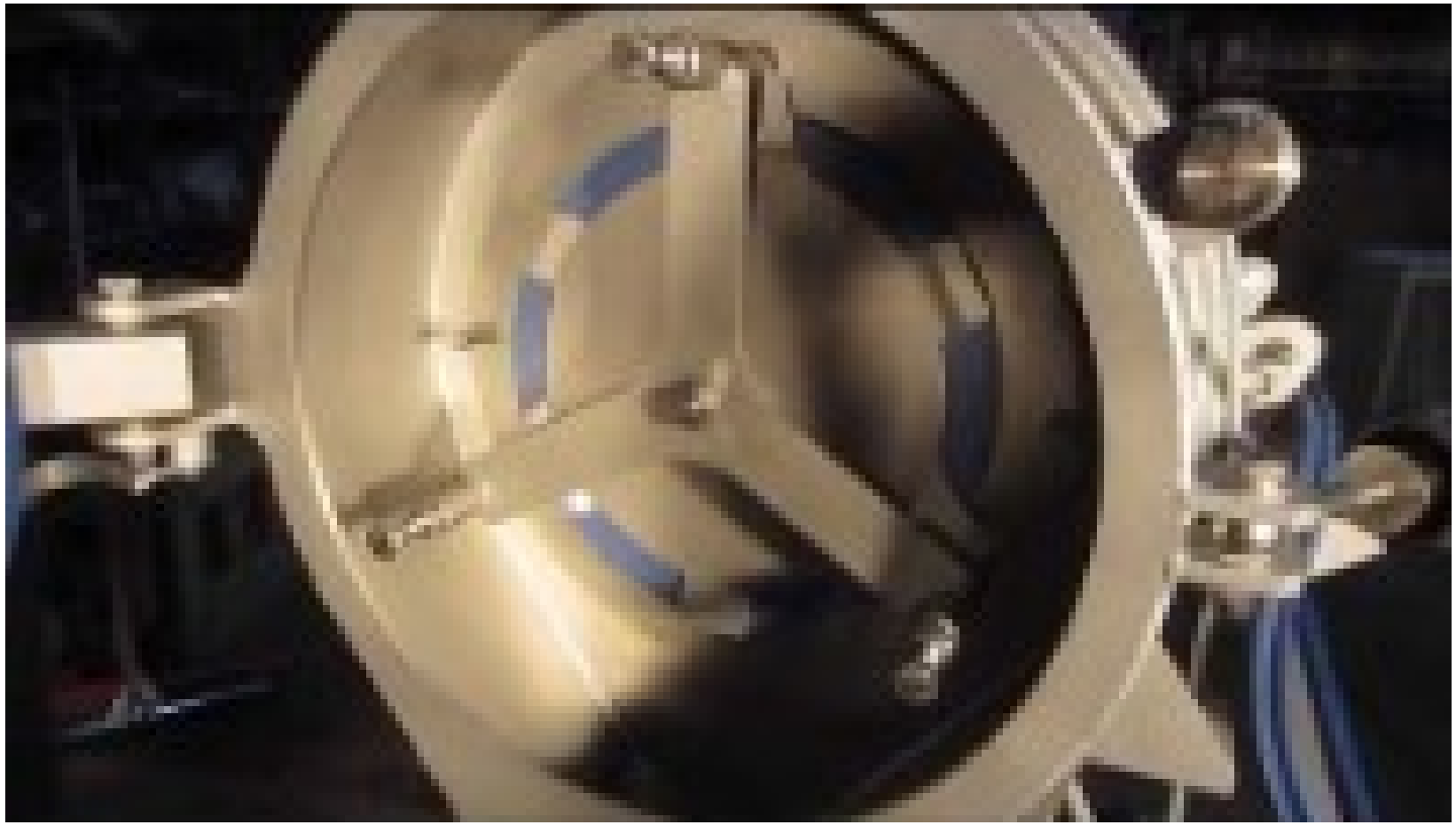

# MECHANICAL DEWATERING – Centrifugal Dewatering


Do Good Spirits
10 Union St
Roscoe, NY 12776
Brian Facquet

# MECHANICAL DEWATERING – Centrifugal Dewatering


Bendt Distilling Co.
225 S Charles St, Lewisville, TX 75057

# MECHANICAL DEWATERING – Screw Press

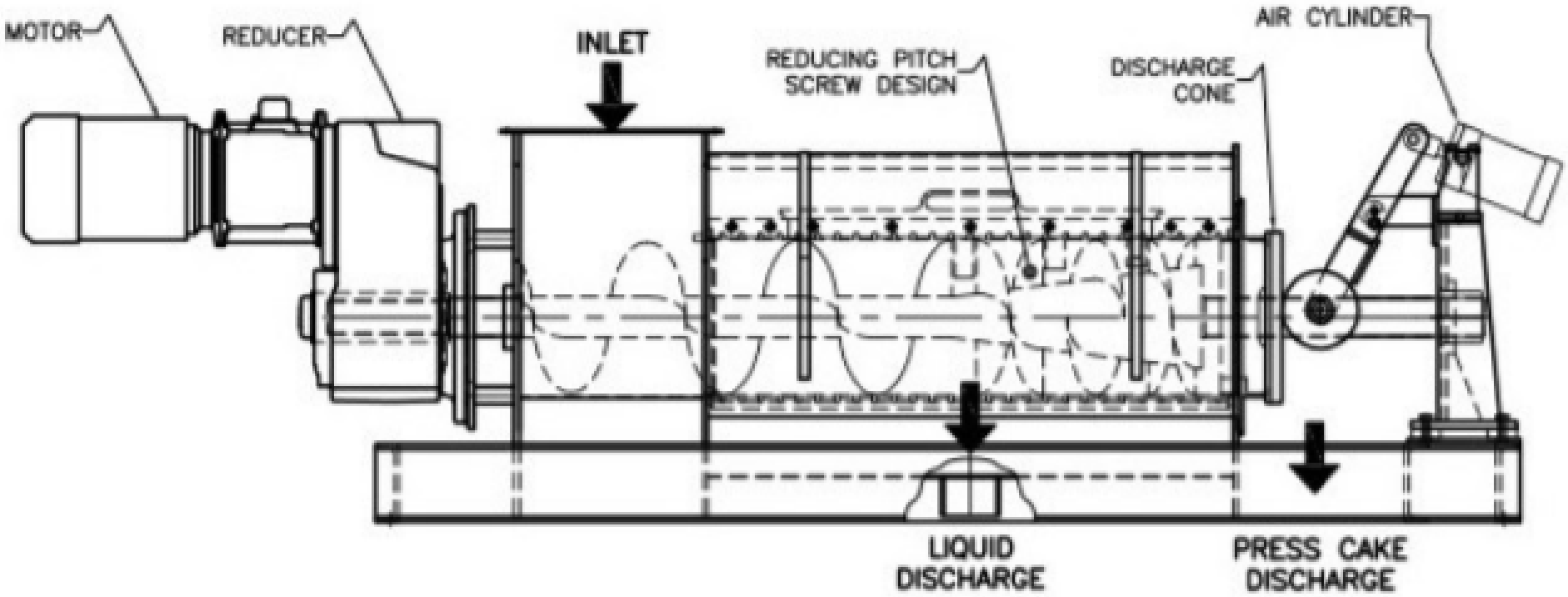

# MECHANICAL DEWATERING – Overview

| Machine | Price | Solids Output | Description |
|---|---|---|---|
| Cross-Flo | $12K | 90% moisture | Porridge, but more like soup |
| Vibroscreener | $15K | 70-80% moisture | Porridge, free water still dripping, less soupy |
| Centri-Sifter | $25K | 50-70% moisture | Free Water removed – ***see video attached*** |
| Screw Press | $60K+ | 50-70% moisture* | Free Water removed, a bit more pressed than above |
| Centrifuge | $60-$100K+ | 35-60% moisture | More water squeezed than a press using high G rotation |

# MECHANICAL DRYING OF SPENT DISTILLERS GRAINS – Fluid Bed Dryer

- Compact and lightweight
- Sanitary 304 stainless steel contact surfaces, with other materials available
- High levels of vibration resistance
- Quick-disconnect clamps and minimal interior seams for quick and easy cleaning and inspection
- Choice of fluid bed air distributor and adjustable weir to control the bed depth
- Optional construction to 3-A, FDA, and BISCC standards

# MECHANICAL DRYING OF SPENT DISTILLERS GRAINS – Fluid Bed Dryer

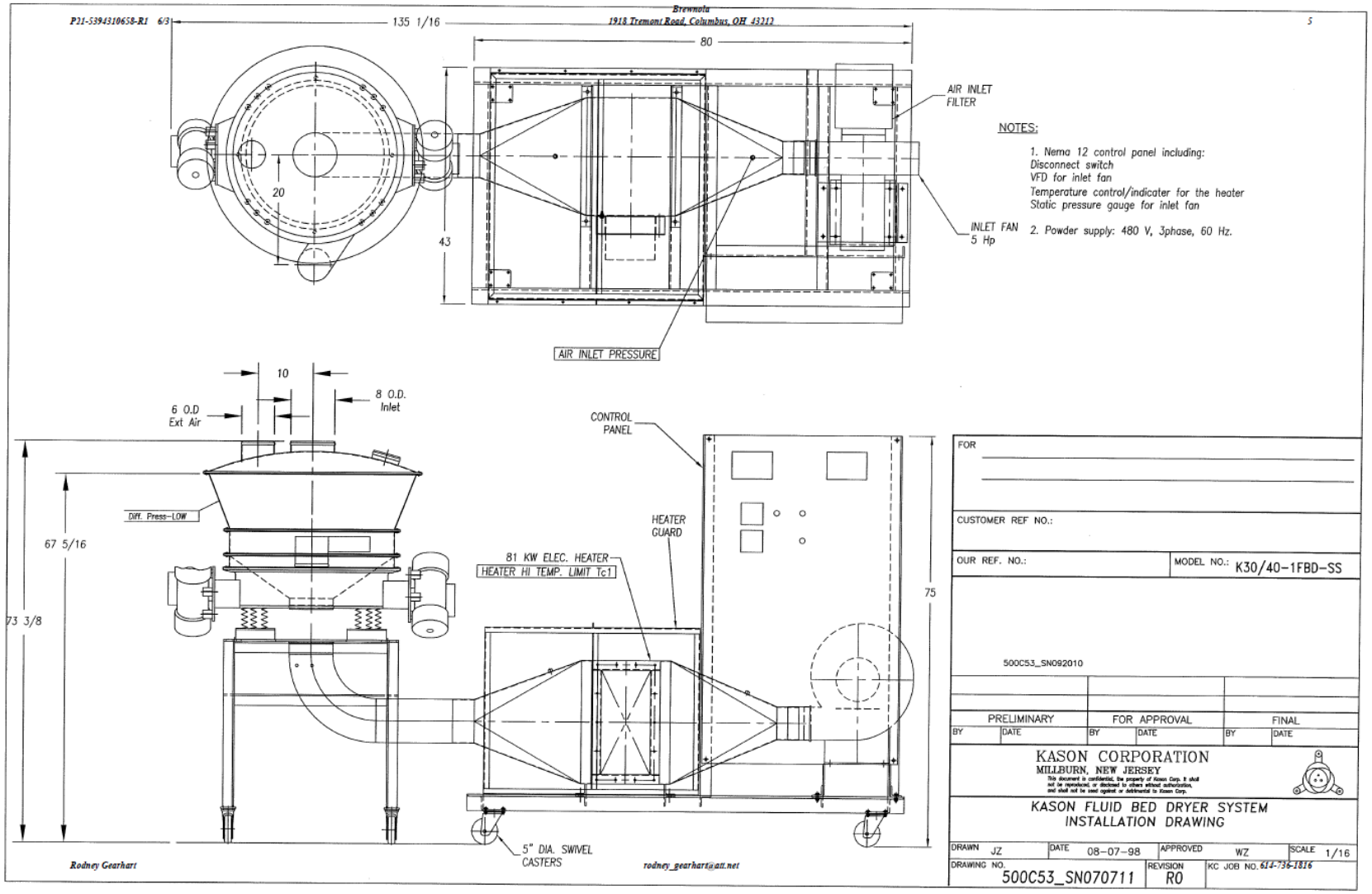


Kason

amp Process Solutions Group
A Kason and Marion Partnership

MARION PROCESS SOLUTIONS

# MECHANICAL DRYING OF SPENT DISTILLERS GRAINS – Fluid Bed Dryer

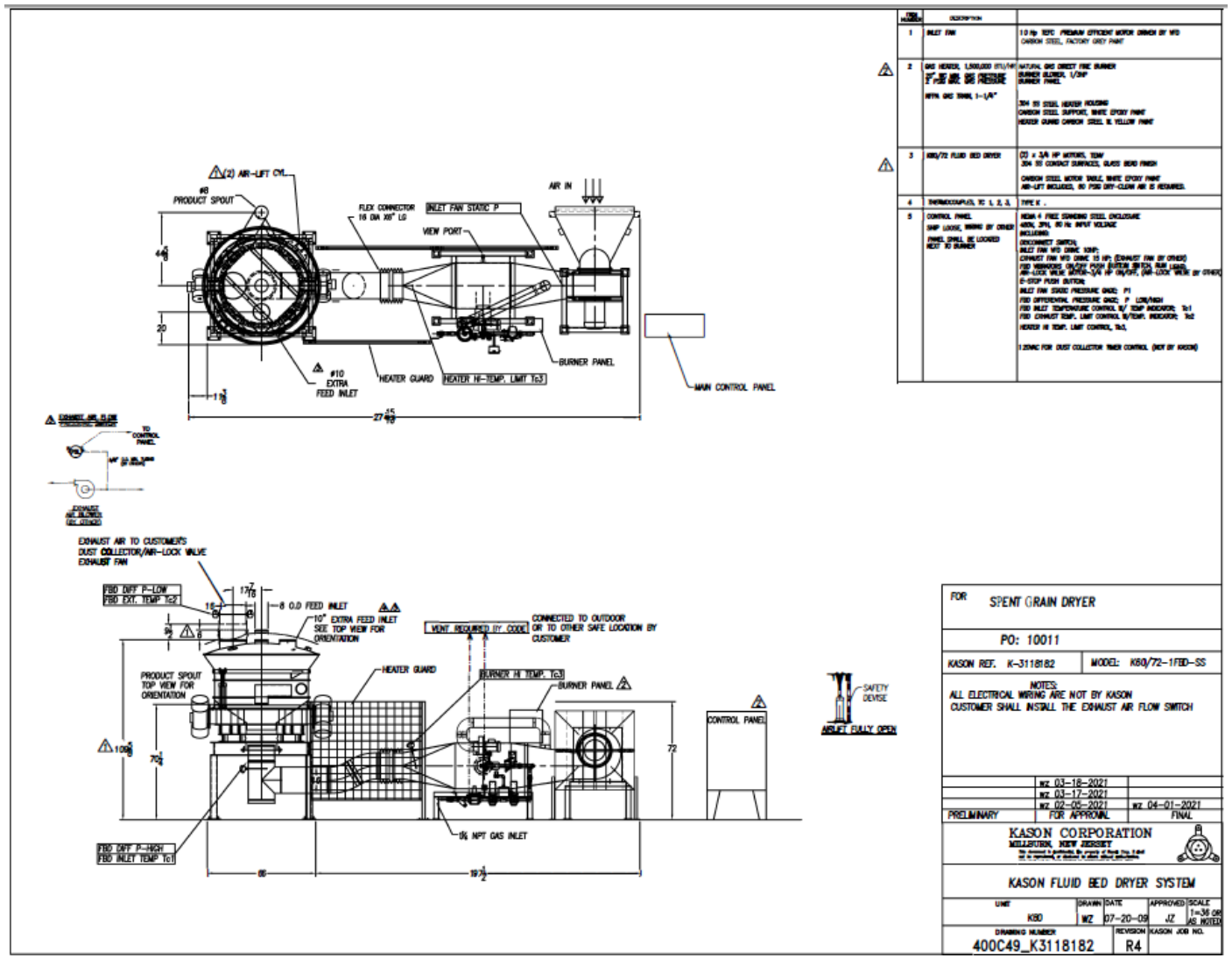


Kason

amp Process Solutions Group
A Kason and Marion Partnership

MARION PROCESS SOLUTIONS

# MECHANICAL DRYING OF SPENT DISTILLERS GRAINS – Fluid Bed Dryer

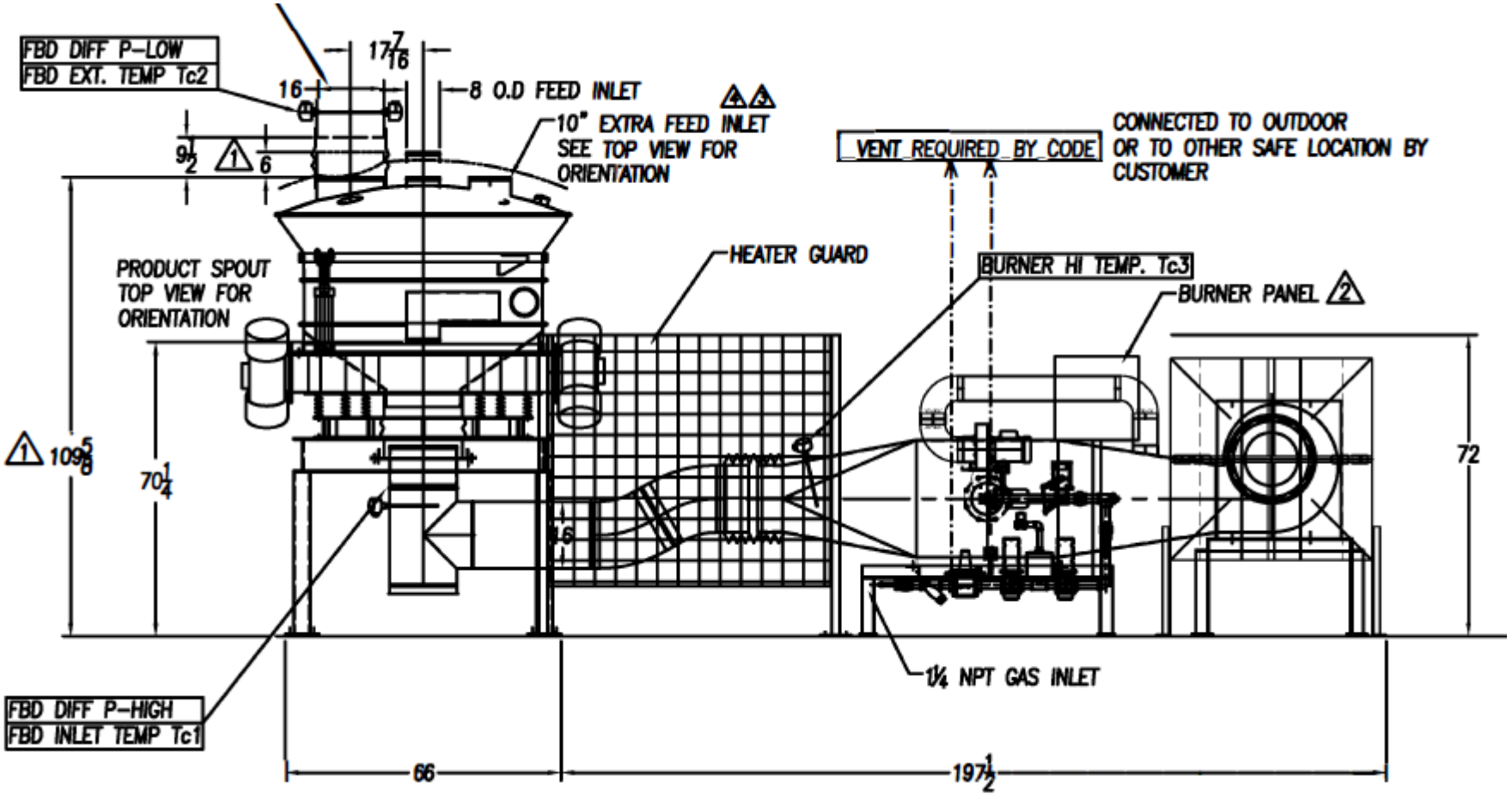


Kason

amp Process Solutions Group
A Kason and Marion Partnership

MARION PROCESS SOLUTIONS

# MECHANICAL DRYING OF SPENT DISTILLERS GRAINS – Fluid Bed Dryer

| | Rate | Energy Consumption | |
|---|---|---|---|
| | Lbs/hr (Wet) | BTU (M) | BTU/Lbs |
| Dryer 1 - Rotary | 2,000 | 2 | 1,000 |
| Dryer 2 - Rotary | 4,000 | 5 | 1,250 |
| Dryer 3 - Rotary | 10,000 | 10 | 1,000 |
| Dryer 4 - Rotary | 12,000 | 11 | 917 |
| Dryer 5 - Rotary | 16,000 | 16 | 1,000 |
| Dryer 6 - Rotary | 20,000 | 22 | 1,100 |
| Dryer 7 - Hybrid | 1,000 | 4.25 | 4,250 |
| Dryer 8 - Hybrid | 2,000 | 8.5 | 4,250 |
| Dryer 9 - Hybrid | 5,000 | 21.25 | 4,250 |
| Dryer 10 - Rotary | 6,000 | 37 | 6,167 |
| Dryer 11 - Batch | 625 | 1 | 1,600 |
| FBD - Competitor | 6,000 | 7.5 | 1,250 |
| Kason | 8,000 | 5.5 | 688 |

# MECHANICAL DRYING OF SPENT DISTILLERS GRAINS – Fluid Bed Dryer

# MECHANICAL DRYING OF SPENT DISTILLERS GRAINS – Fluid Bed Dryer

# MECHANICAL DEWATERING & DRYING OF SPENT DISTILLERS GRAINS

Kason

amp Process Solutions Group
A Kason and Marion Partnership

MARION PROCESS SOLUTIONS