Pelleting:
Lessons Learned and Questions Unanswered, promises … promises … promises

Distiller's Grains Technology Council

May 16-17, 2018

Des Moines, IA

Kim Koch, Ph.D.

Northern Crops Institute,

North Dakota State University

Typical pellet press (mill) used in the feed Industry

Common features

- variable speed feeder
- conditioning chamber
- ring-die and roller assembly

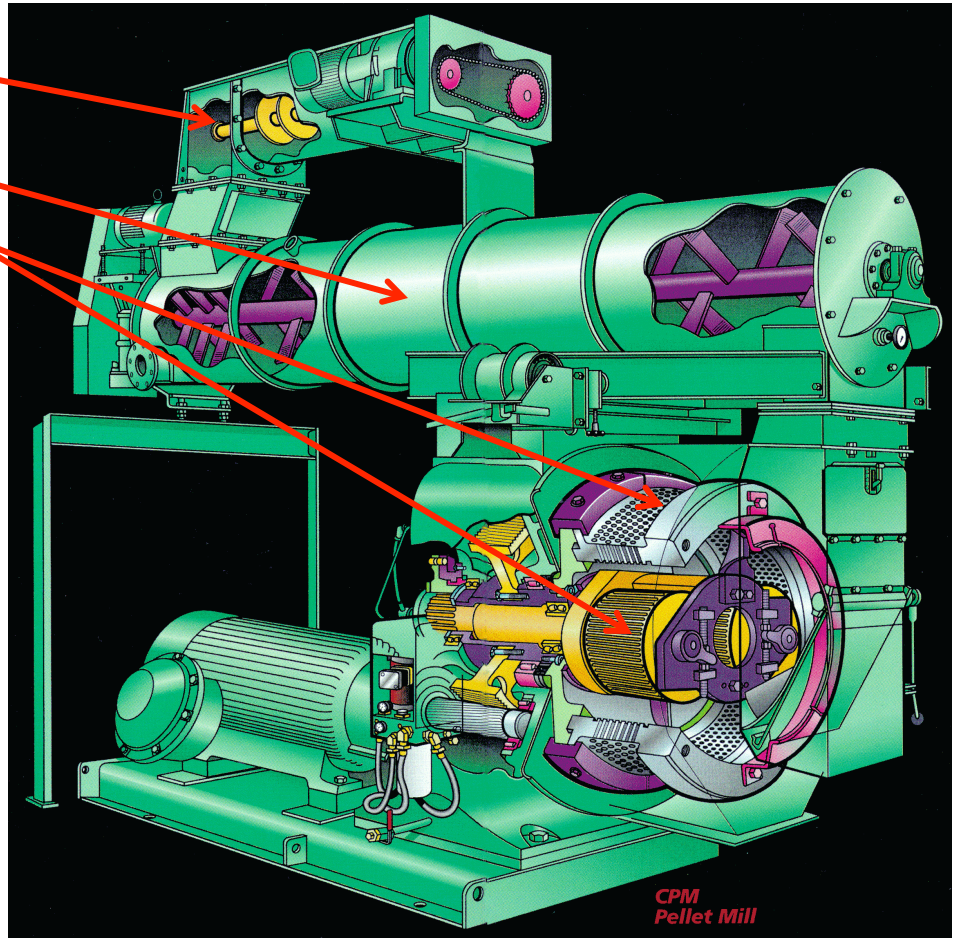

Benefits of pelleting

- Physical
  - **Densification**
  - Packaged nutrients
  - Animal acceptance
- Nutritional
  - Improved nutrient digestion
    - Increased rates of gain
- Value
  - Feed savings

Ring Die

Roll Shells

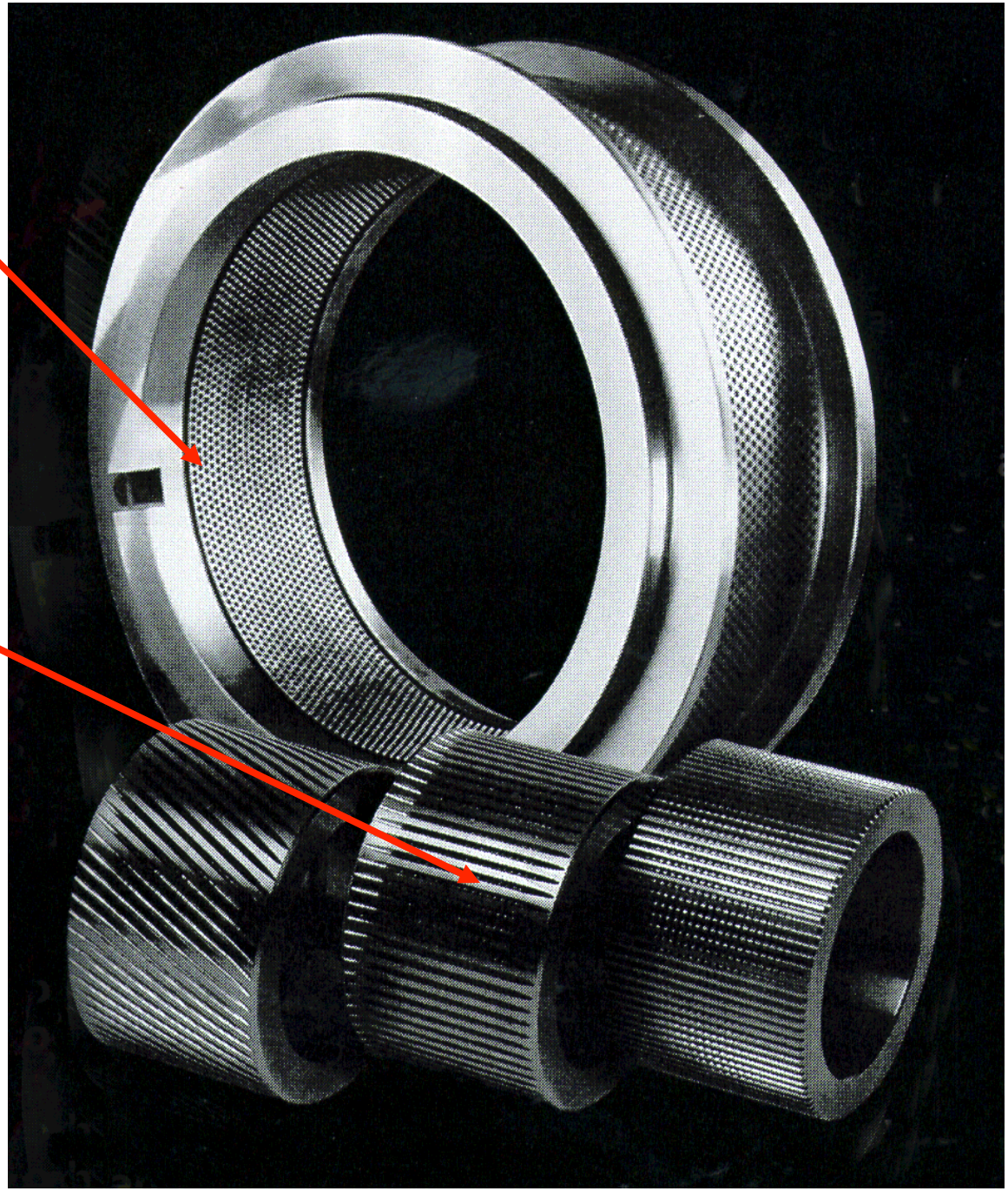

Fundamentals of pellet production

- Die – Roller interaction
  - Feed on the die face <u>must</u> be compressed and extruded through the die holes during successive rotations
    - **Moisture > 17.5% in the feed will cause the roll to slip or slide**
    - Some materials with high levels of protein and/or low bulk density can be difficult to pellet
  - **Resists Compression**
  - **Resists Extrusion**
    - **<u>Dried Distiller's Gains with Solubles (DDGS)</u>**
    - Corn Gluten Meal (CGM)
    - Soybean Meal (SBM)
    - Beet Pulp
    - Soybean Hulls

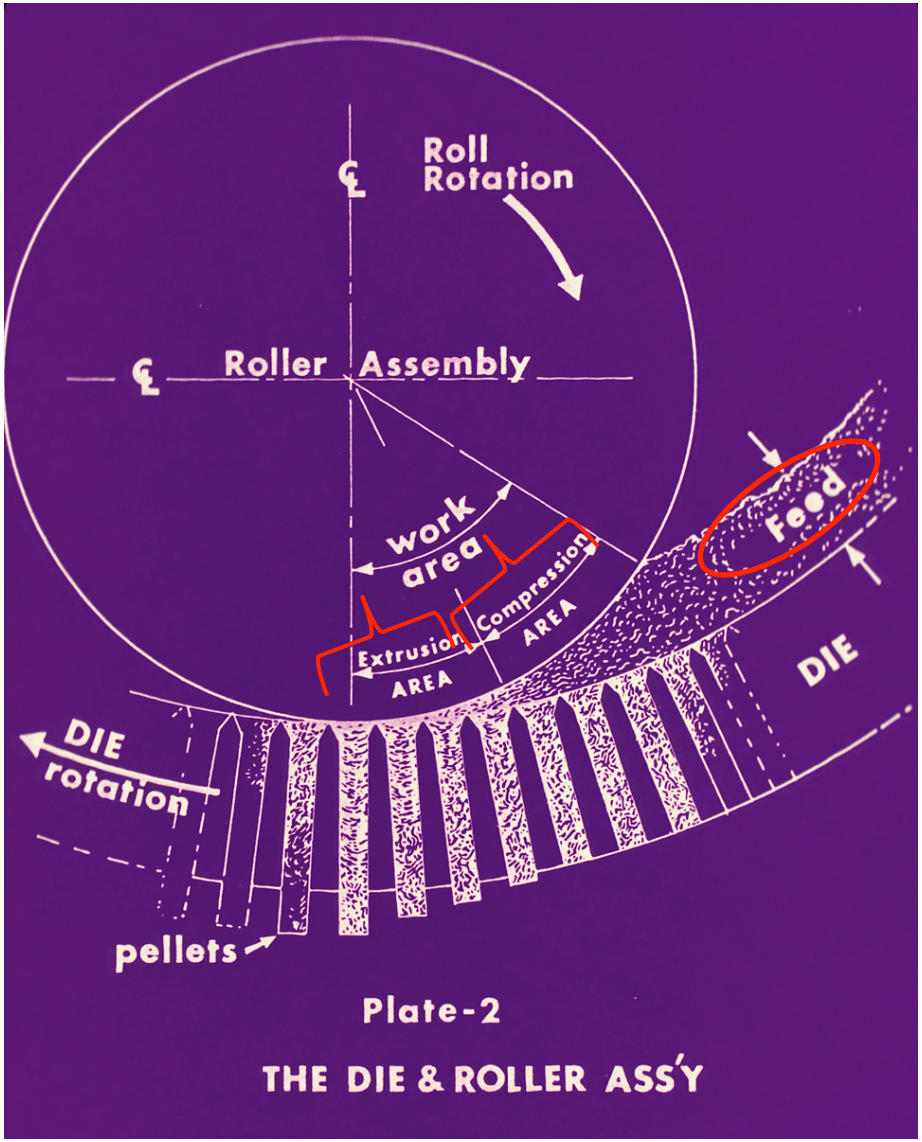

Illustration, Leaver, 1970

Fundamentals of pellet production

- In order to make pellets all forces must be balanced
  - Roll Force **must be greater than** Slip Resisting Force or material will not compress
    - **moisture, lipid (fat), fiber and protein have strong influence**
  - Roll Force **must be greater than** Flow Resisting Force or material will not extrude
    - **particle size, fiber and protein have a major influence**

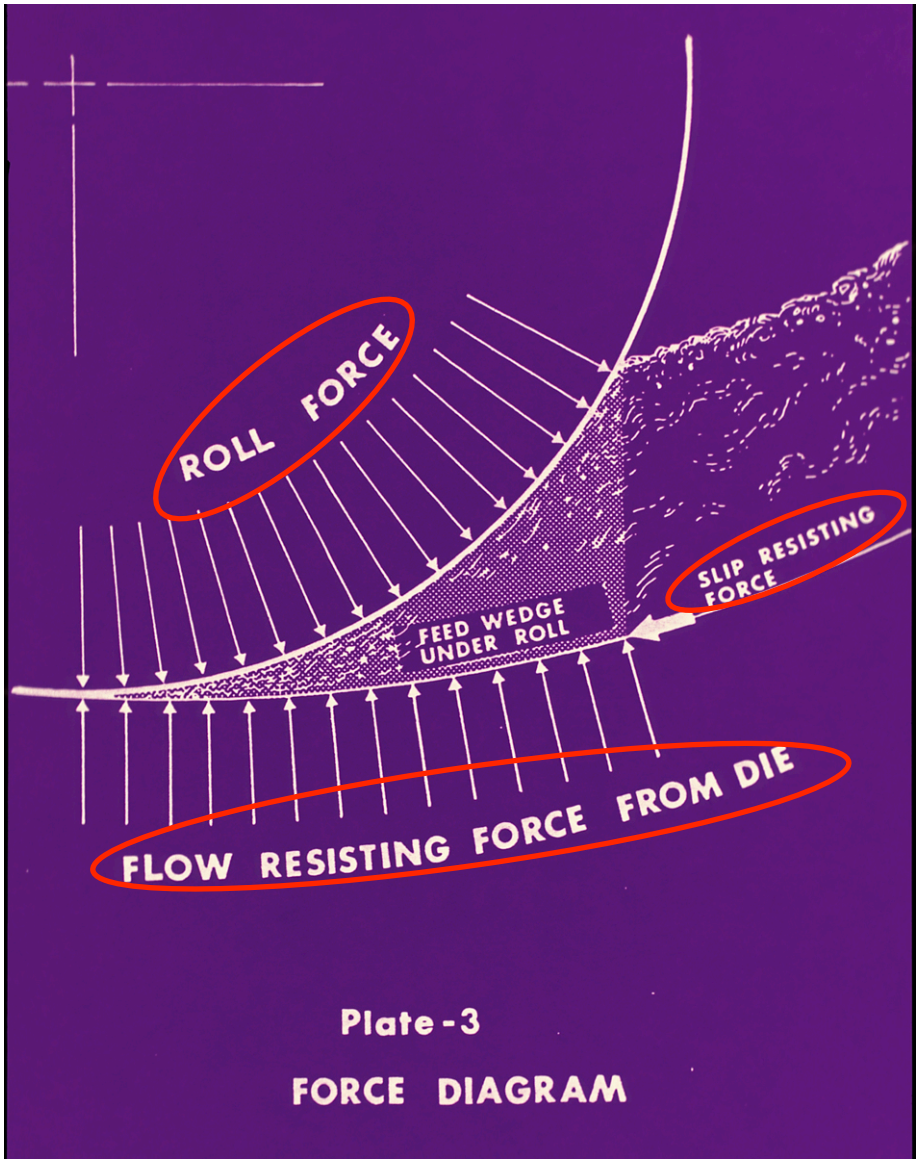

Illustration, Leaver, 1970

Fundamentals of pellet production

- Die hole dimensions
  - Feed material is compressed into the die hole (D, d) and extruded through the effective length (L) of the die.
  - Factors that determine Pellet Quality
    - Performance ratio (L/d)
    - Change the performance ratio to accommodate feed characteristics
      - Retention time
    - Change the speed of the die

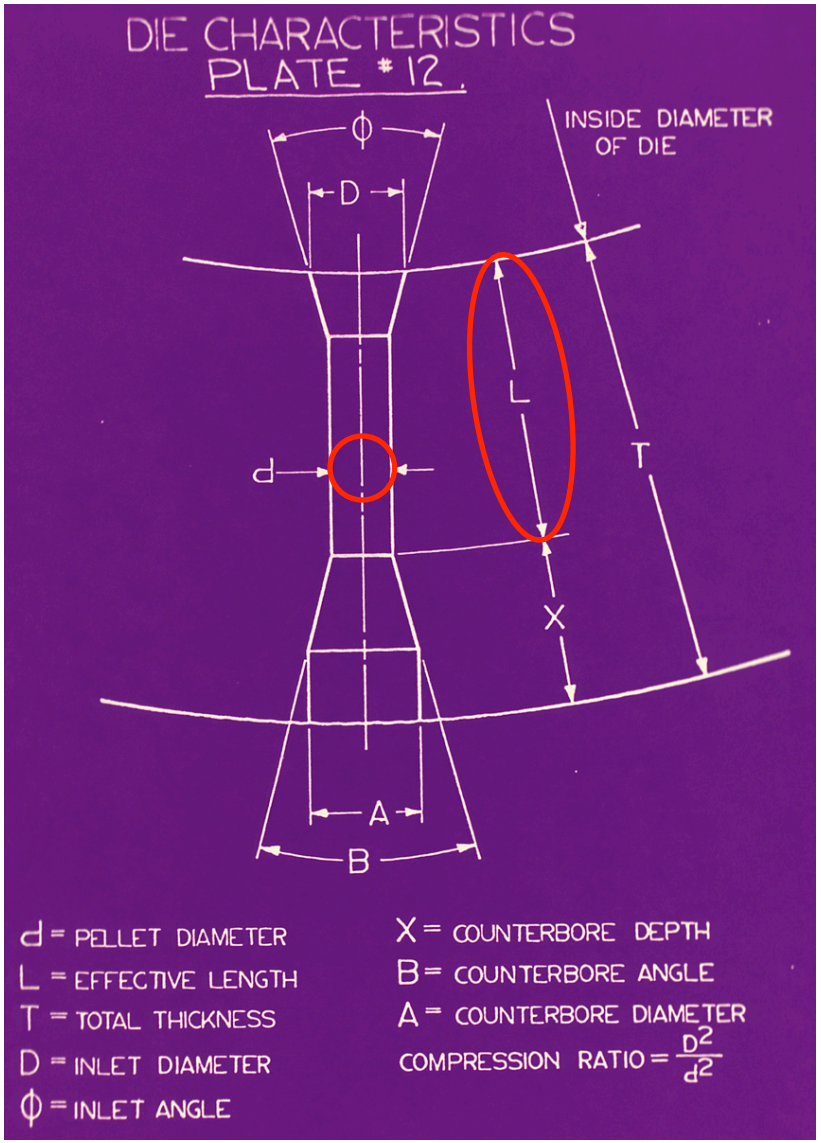

Illustration, Leaver, 1970

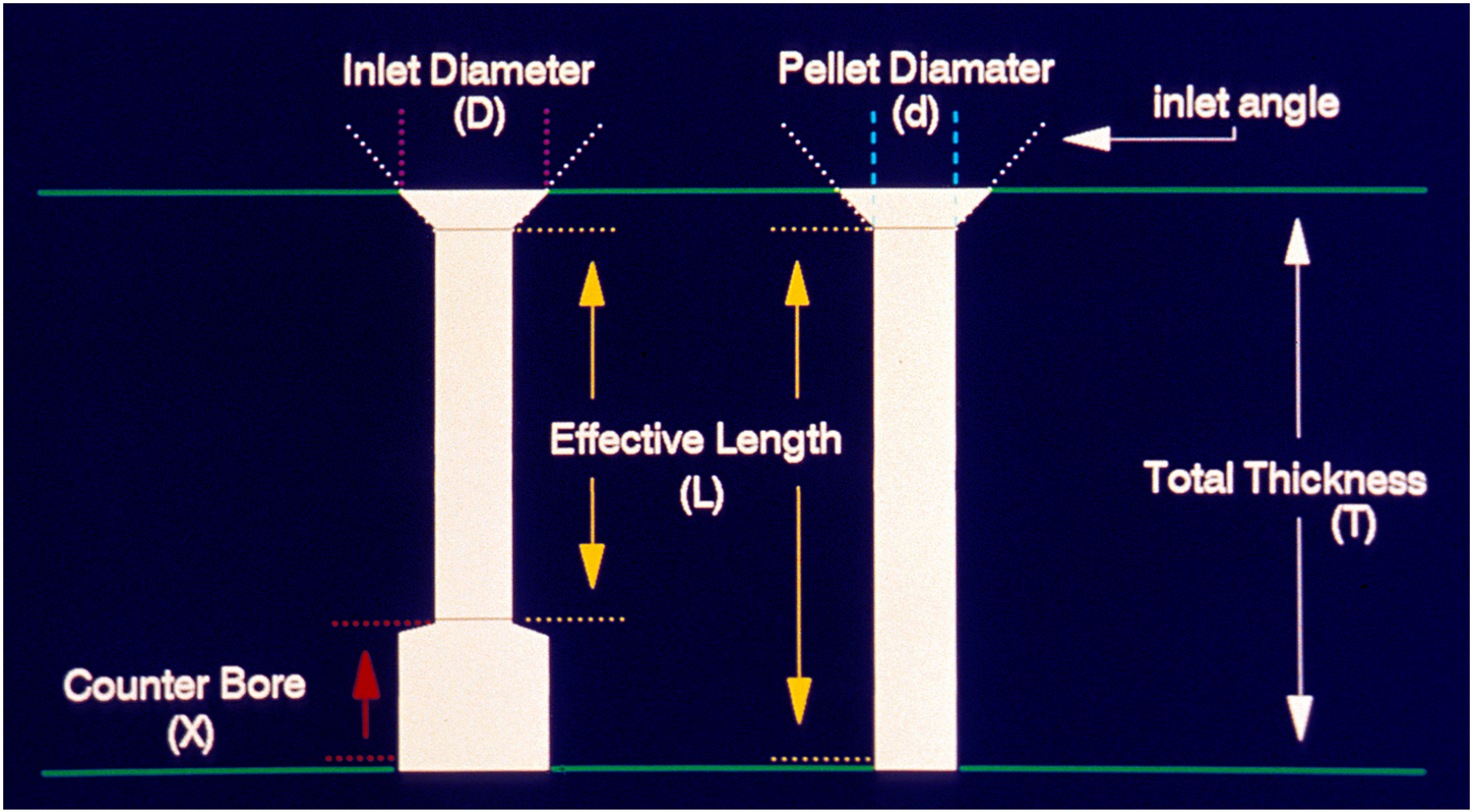

Performance ratio = L/d

For corn-sbm diets = 10 - 12

DDGS (full fat) Characteristics

	Bulk Density, kg/hl	Particle Size, microns	Protein, %	Fat, %	Fiber, %
Knott, Shurson, Goihl	Avg. 45.9 Range 39.6 – 50.6	Avg. 1282 Range 612 – 2125	Avg. 26.6 Range 24.5 – 28.4	Avg. 10.0 Range 9.2 – 11.6	Avg. 6.9 Range 5.8 – 9.1
Koch	Avg. 48.4 Range 45.4 – 51.3	Avg. 588 Range 387 – 810	Avg. 27.6 Range 26.3 – 29.9	Avg. 9.2 Range 8.1 – 10.2	Avg. 10.0 Range 5.5 – 16.0

DDGS and Pellet Production

- Decreased pellet quality?
  - Depends on physical and nutrient characteristics of DDGS
    - **Particle size, density**
    - **Fat, fiber, protein, moisture**
  - Depends on ingredients
    - **Some are complementary**
  - Depends on pellet press operation
    - **Die specifications**
      - **Performance ratio**
    - **Die speed**
    - **Conditioning time and temp**

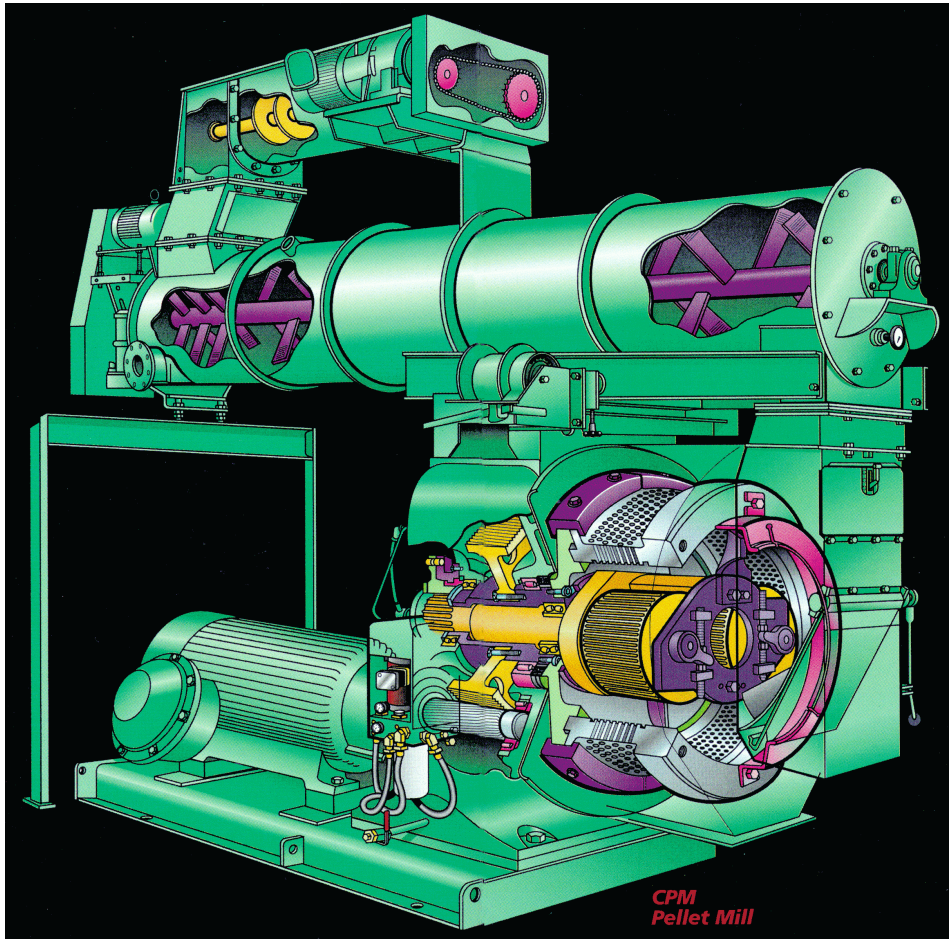

DDGS and Pellet Production

- Pellet trials
  - Pellet die specifications
    - **.25 inch hole (6.4 mm)**
    - **10:1 performance ratio**
  - Pellet die peripheral speed
    - **1,200 ft/min. (365.8 m/min.)**
  - Conditioning chamber
    - **150 rpm**
    - **Retention time = 30 sec.**
  - Feed rate
    - **Constant**
      - **Same setting all trials**

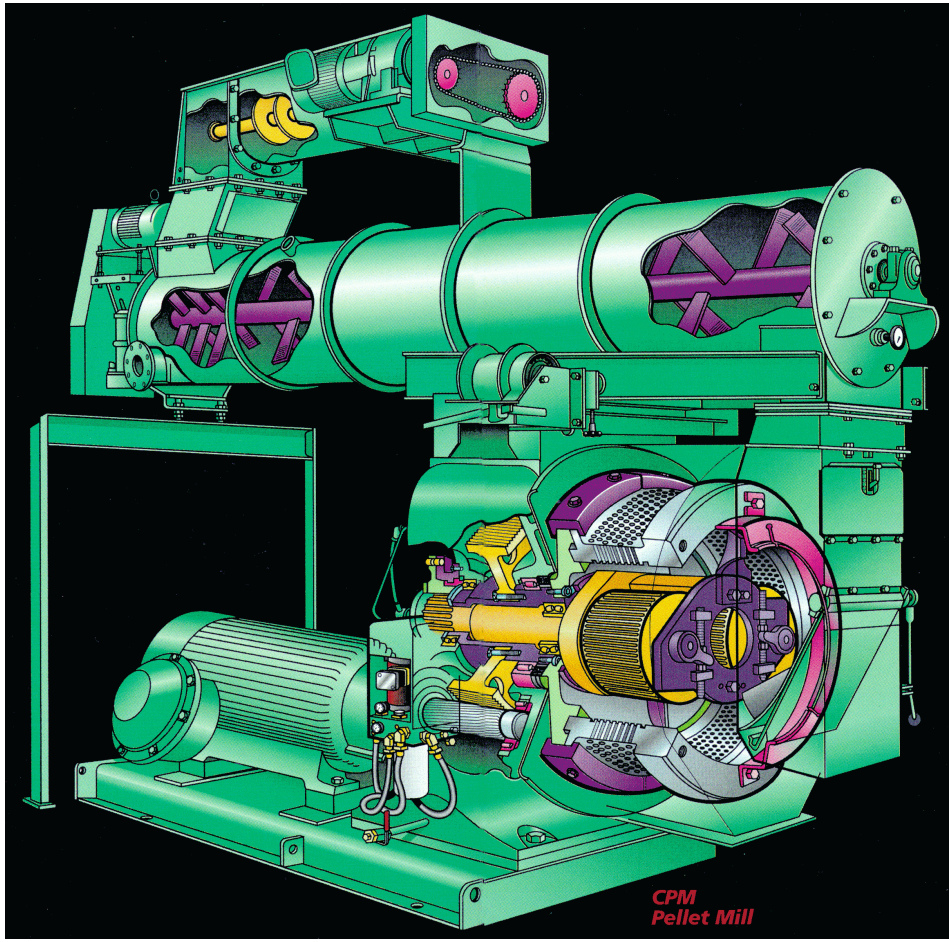

Pellet Production

Durum wheat midds + DDGS (Koch)

Midds - DDGS					
	100%	80/20	70/30	60/40	50/50
mt/hr	0.7	0.8	0.8	0.9	0.8
kwh/mt	23.8	26.0	23.9	27.3	27.5
PDI %	96.1	96.3	94.4	95.3	93.3
kg/hl	66.6	63.1	63.3	63.6	60.0

Pellet Production

Durum wheat midds + DDGS + Peas (Koch)

Midds – DDGS - Peas					
	100%	60/20/20	60/40	50/30/20	50/50
mt/hr	.7	.9	.8	.9	.8
kwh/mt	23.8	26.9	23.9	27.3	27.5
PDI %	96.1	96.6	94.4	95.3	93.3
kg/hl	66.6	67.6	63.3	63.6	60

Pellet Production

Barley malt sprouts and DDGS (Koch)

Sprouts - DDGS				
	100%	90/10	80/20	70/30
mt/hr	0.7	0.7	0.7	0.9
kwh/mt	46.1	41.4	33.4	24.6
PDI %	95.9	97.1	96.1	92.5
kg/hl	63.5	60.2	59.3	57.6

Pellet Production

DDGS and Beet Pulp (Koch)

DDGS – Beet Pulp						
	100%	90-10	70-30	50-50	30-70	10-90
mt/hr	.9	.8	.8	.8	.8	.8
kwh/mt	16.2	17.5	19	19.7	21.1	26.3
PDI %	68.8	68.6	75.0	86.6	86.5	85.1
kg/hl	53.0	56.6	58.6	59.3	64.5	69.0

Pellet Production

Typical swine grower diet (Koch)

L/d = 10.0 (6.4cm/6.4mm)

	Swine grower	substitute10% DDGS
C°	77	76
mt/hr	2.9	3.1
kwh/mt	10.2	9.5
PDI %	84.7	70

Substituting 10% DDGS

- 7.4% decrease in kWh/mt
  - save $.02/mt
- 17.4% decrease in PDI
  - most likely will cause increased re-work (fines) and poorer feed efficiency

Pellet Production

Typical swine grower diet (Koch)

L/d = 10.7 (5.1cm/4.8mm)

	Swine grower	substitute10% DDGS
C°	84	82
mt/hr	3.2	3.1
kwh/mt	8.52	9.5
PDI %	91.2	90.8

Changing die specification

- 11.4% increase in kWh/mt
  - added $.03/mt
- essentially the same PDI%
  - do not expect any differences in re-work, or animal performance

DDGS and Pellet Production

Decreased pellet quality?

- Depends on physical and nutrient characteristics of DDGS
  - **Particle size, <400-2100 microns density, 40-51 kg/hl**
  - **Fat, <3-11%; fiber, <5.5-16% protein, 25->30%**
- Depends on pellet mill operation
  - **Die specifications**
    - **Performance ratio**
  - **Die speed**
  - **Conditioning**

1. What is current size reduction

2. What is current density
    a.) fiber removal
    b.) fat removal

3. What is current fat (lipid) content
    a.) low, medium, high

4. What is current protein content

Knowing the answers to these questions will aid operators in their choice of pelleting parameters. Each situation will be unique.

There is no “pre-packaged” expert with answers to the questions – each situation is unique and requires an individual approach.

Thank You

kim.koch@ndsu.edu